GOLLER DYEPADDER ECONOMICA

Even dyeing. No crease marks or distortion of the fabric. A smooth and clean surface. Highest standards in reproducibility and handling. All these features in one simple and economic unit. Based on the principle of the swimming rollers, the ECONOMICA is the perfect choice for small to medium batches in open width dyeing and finishing.

中国恒天 CHTC | FONG'S

GOLLER

GOLLER DYEPADDER ECONOMICA

PRECISION

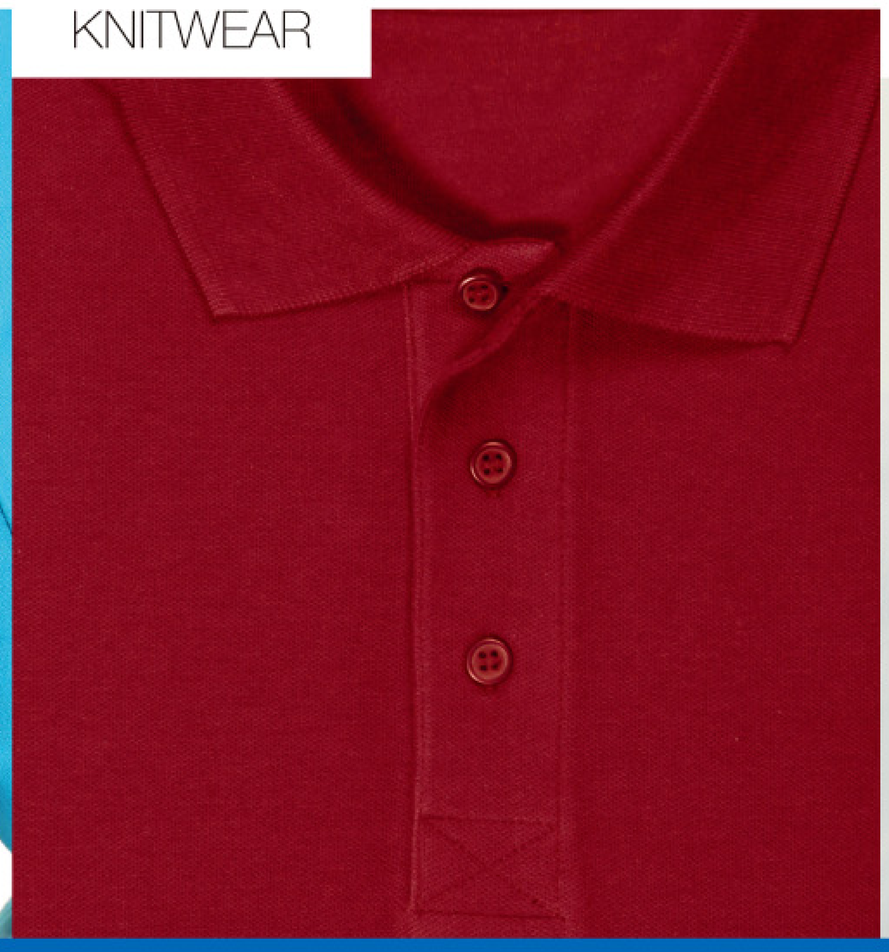

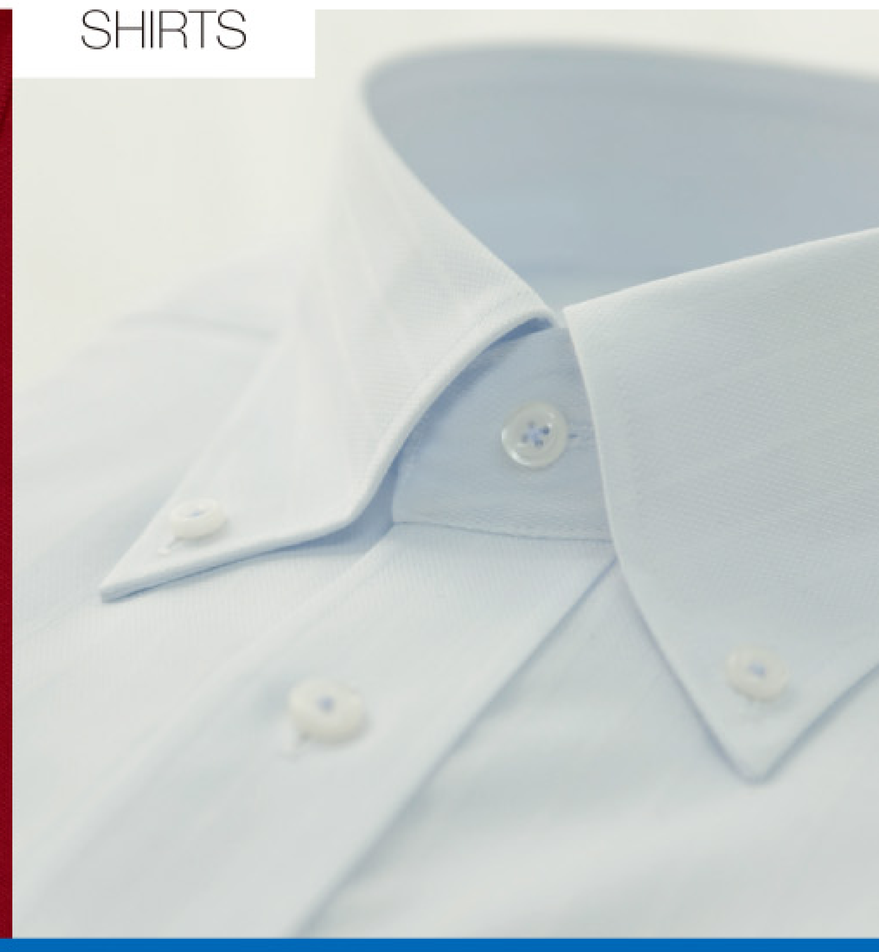

PRECISION

Side-to-side and beginning-to-end the same shade due to the swimming roller technology and GOLLER dyeing competence.

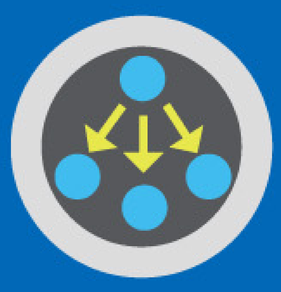

REPRODUCIBILITY

Each lot the same based on exact pick-up adjustment.

EFFICIENCY

No steam, minimum electricity: just dyestuff, fabric and the right chemistry.

Based on the reliable and established principle of the swimming roller, the ECONOMICA DYEPADDER is the best example of how to make good things even better. The deflection controlled rollers are working according to the principle: simple, yet safe. Irrespective of the overall pressure of the padder – the deflection of the squeezing rollers is always in compliance with the requirements to ensure an even dyeing from one side to the other. On top of that the biggest diameters of guiding rollers ensure a safe fabric transport with little tension. Thermplates keep the temperature of the dyebath homogeneously within the required limits – no matter whether cool or hot. And the varieties of troughs cater for every fabric: woven, knitted and everything in between.

All these are reasons for the name of the GOLLER DYEPADDER: **"ECONOMICA"**

GOLLER DYEPADDER ECONOMICA

- Application device for every precise and homogeneous pick-up requirement
- Two deflection controlled rolls according to the swimming roller principle
- Smooth and clear fabric surface
- High reproducibility
- Precise dosing
- Cooling and / or heating of the trough
- Tension control
- Different trough designs
- Automatic self-cleaning
- Low energy – no steam
- Short payback
- Low maintenance
- Easy handling

BLUeCOMPETENCE
Alliance Member
Partner of the Engineering Industry Sustainability Initiative

The Best of German Engineering
Das Lexikon des deutschen Maschinenbaus

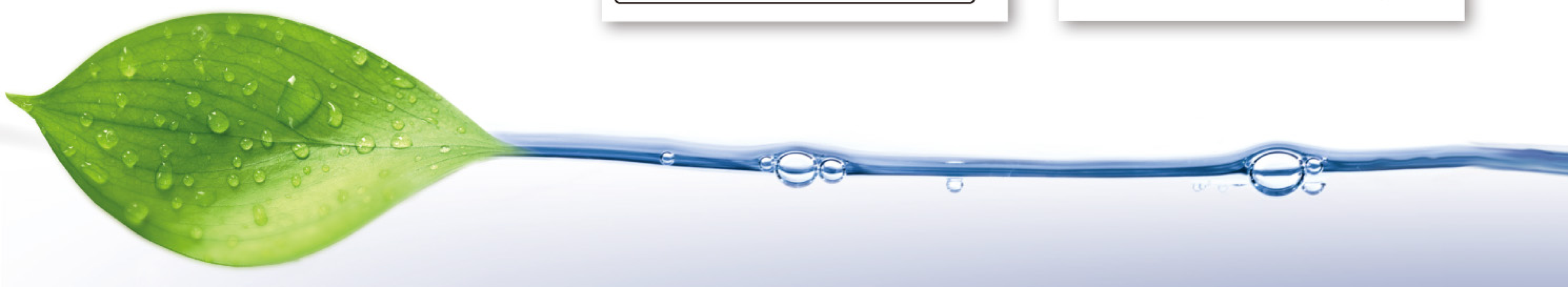

GOLLER DYEPADDER ECONOMICA

THE PRINCIPLE

1. Overall pressure

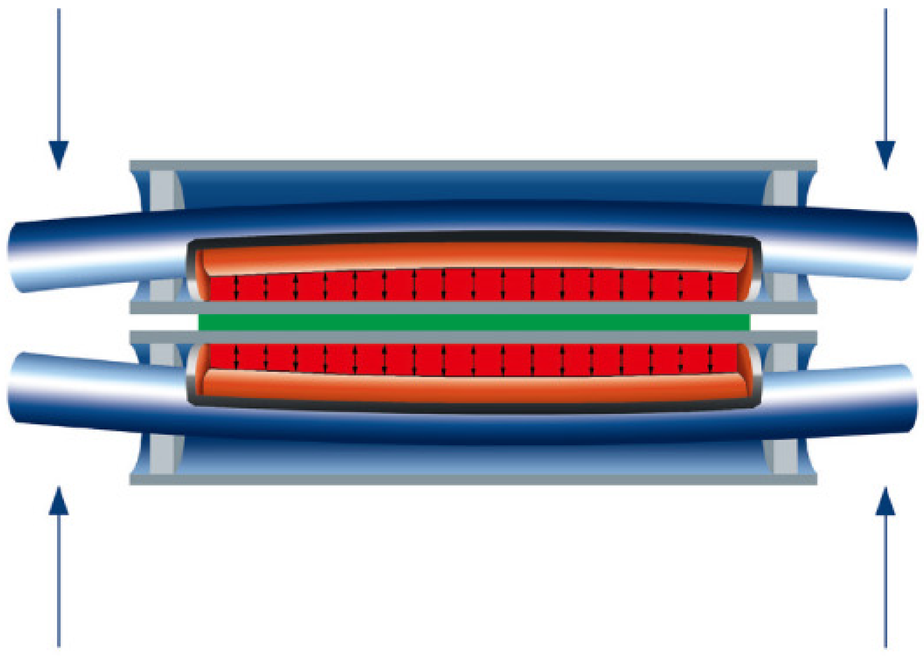

2. Pressure on the right selvedge

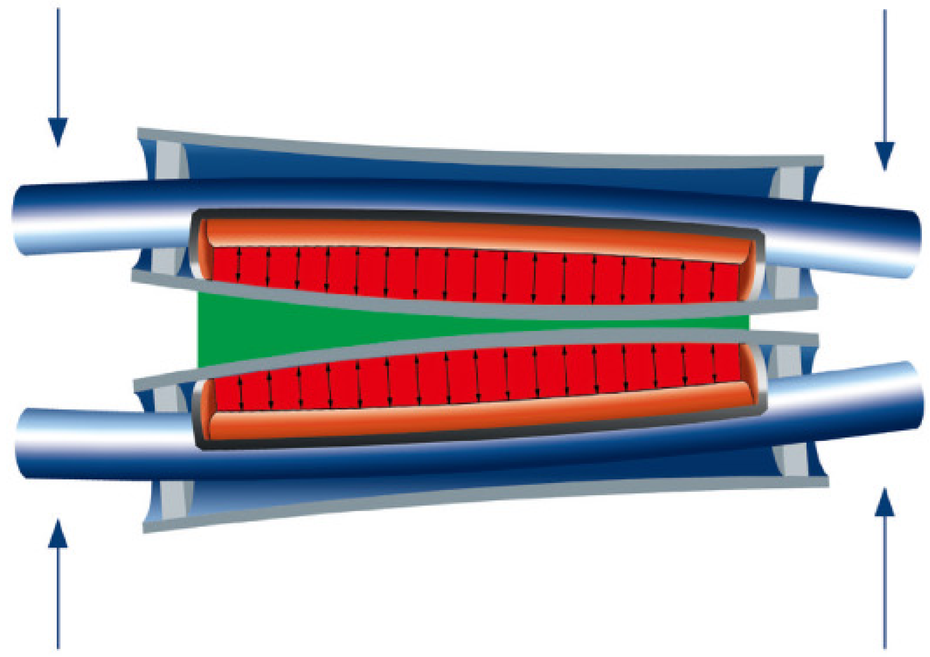

3. Less pressure in the center

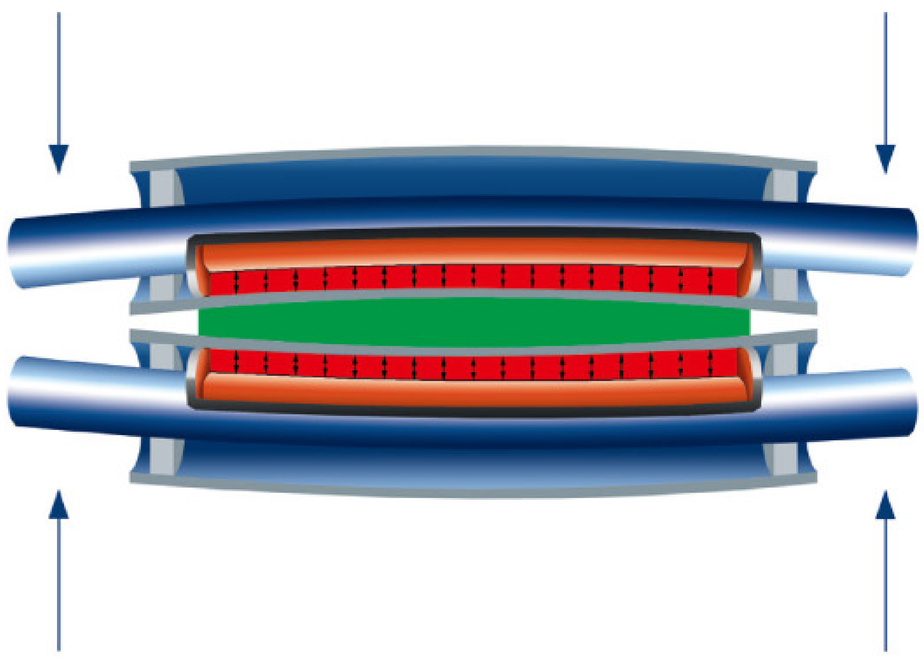

4. Pressure in the center

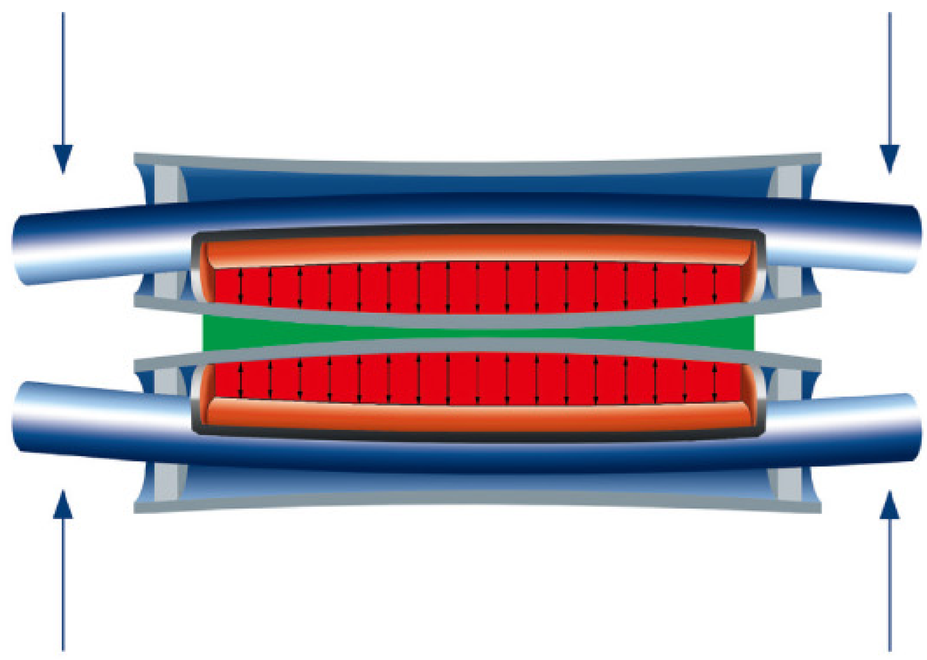

Deflection control with the swimming roller principle:

Irrespective of the overall pressure, a linear nip (1), less pressure on the selvedges (2, 4) or in the center (3) can be achieved to cater for every requirement.

TOUCH

GOLLER

GOLLER DYEPADDER ECONOMICA

DIMENSIONS AND SPECIFICATIONS

Woven goods without automatic self cleaning device

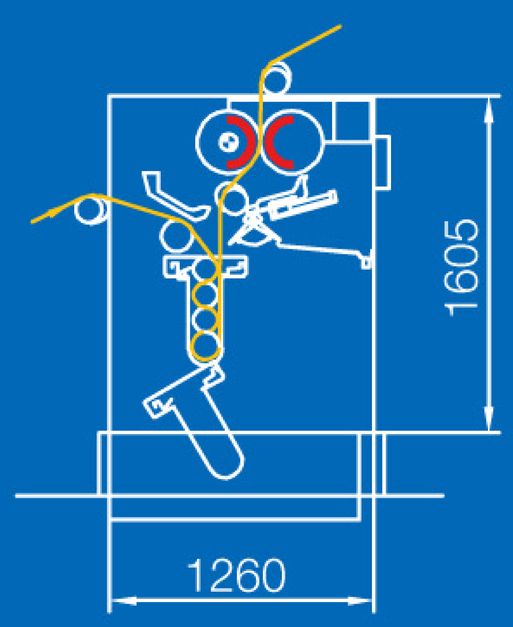

Trough content approx. 55l

Woven/knitted goods with automatic self cleaning device

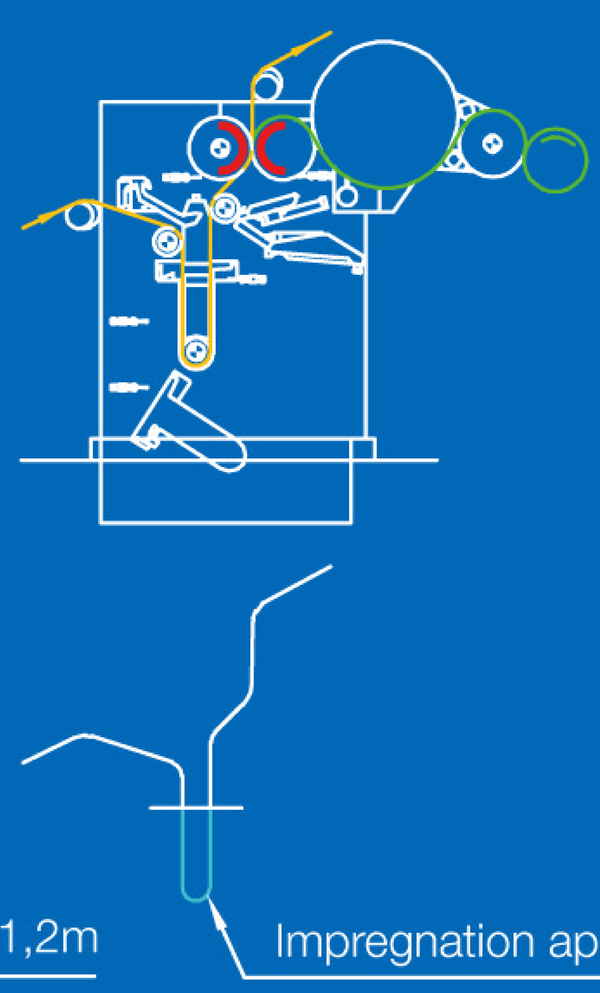

Trough content approx. 38l

Knitted goods with nip dyeing

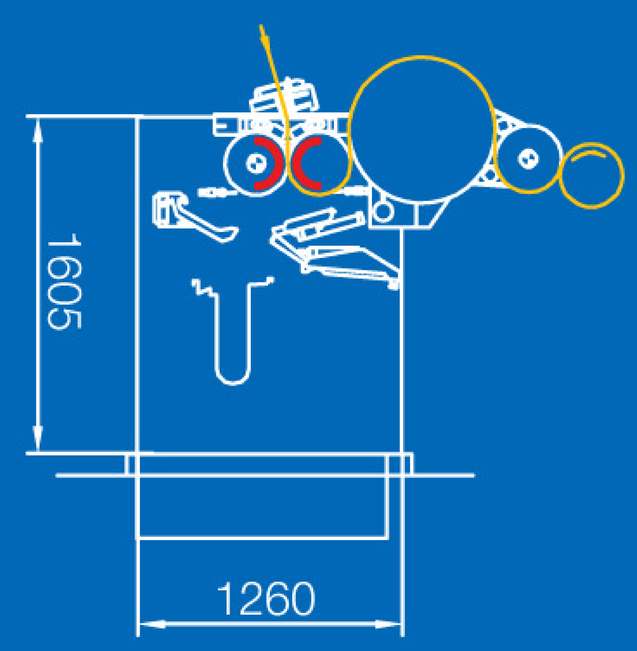

GOLLER (HK) LIMITED
8/F., 22-28 Cheung Tat Road,
Tsing Yi, Hong Kong
Phone +852 2449 9280
Fax +852 2449 9638
E-Mail info@goller-hk.com
www.goller-hk.com

FONG'S EUROPE GMBH
Milchgrundstraße 32
74523 Schwäbisch Hall, Germany
Phone +49 (0) 791 403 0
Fax +49 (0) 791 403 166
E-Mail info@fongs.eu
www.fongs.eu

FONG'S LATIN AMERICA LIMITADA
General Carol Urzua 7035
Las Condes, Santiago de Chile
Phone +56 2 2724 7720
Fax +56 2 2710 2693
E-Mail flam@fongs.eu
www.fongs.eu

中国恒天 CHTC | FONG'S

GOLLER